COMPONENT LIST
POP-UP CHUTE ADAPTER

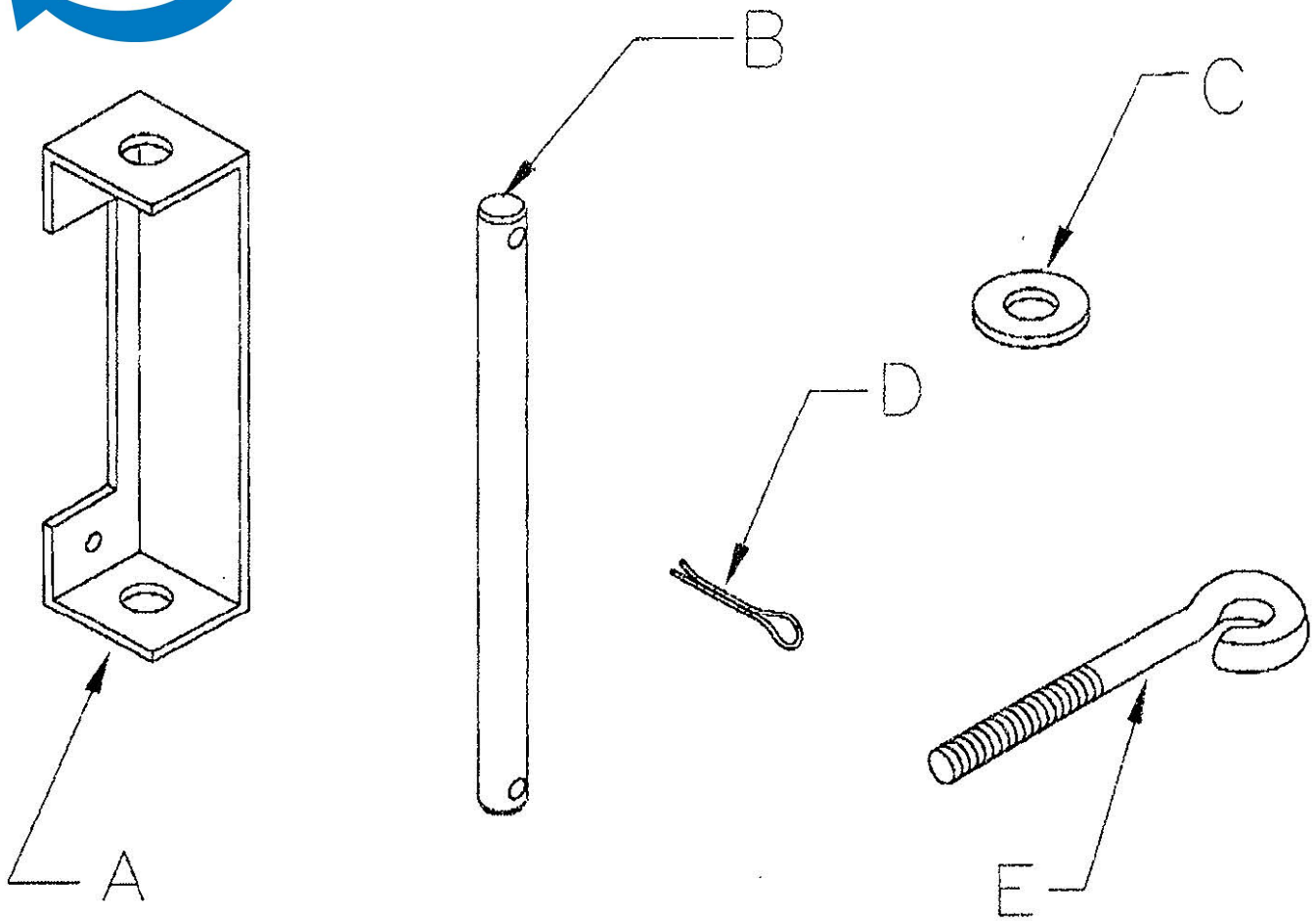

PARTS NOT TO SCALE

PART	QUANTITY	DESCRIPTION	NOTES
A	2	POP-UP CHUTE MOUNTING BRACKET	
B	2	15" ALUMINUM ROD	
C	4	3/4" FLAT WASHER	
D	4	COTTOR PIN	
E	2	EYE BOLT	
F	1	GALVANIZED STEEL TUBE	NOT SHOWN
G	1	REFRIGERATION CHUTE	NOT SHOWN
H	4	1/4" X 2 1/2" SELF DRILLING SCREWS	NOT SHOWN

13578
4/17/00

INSTALLATION INSTRUCTIONS FOR POP-UP CHUTE ADAPTER

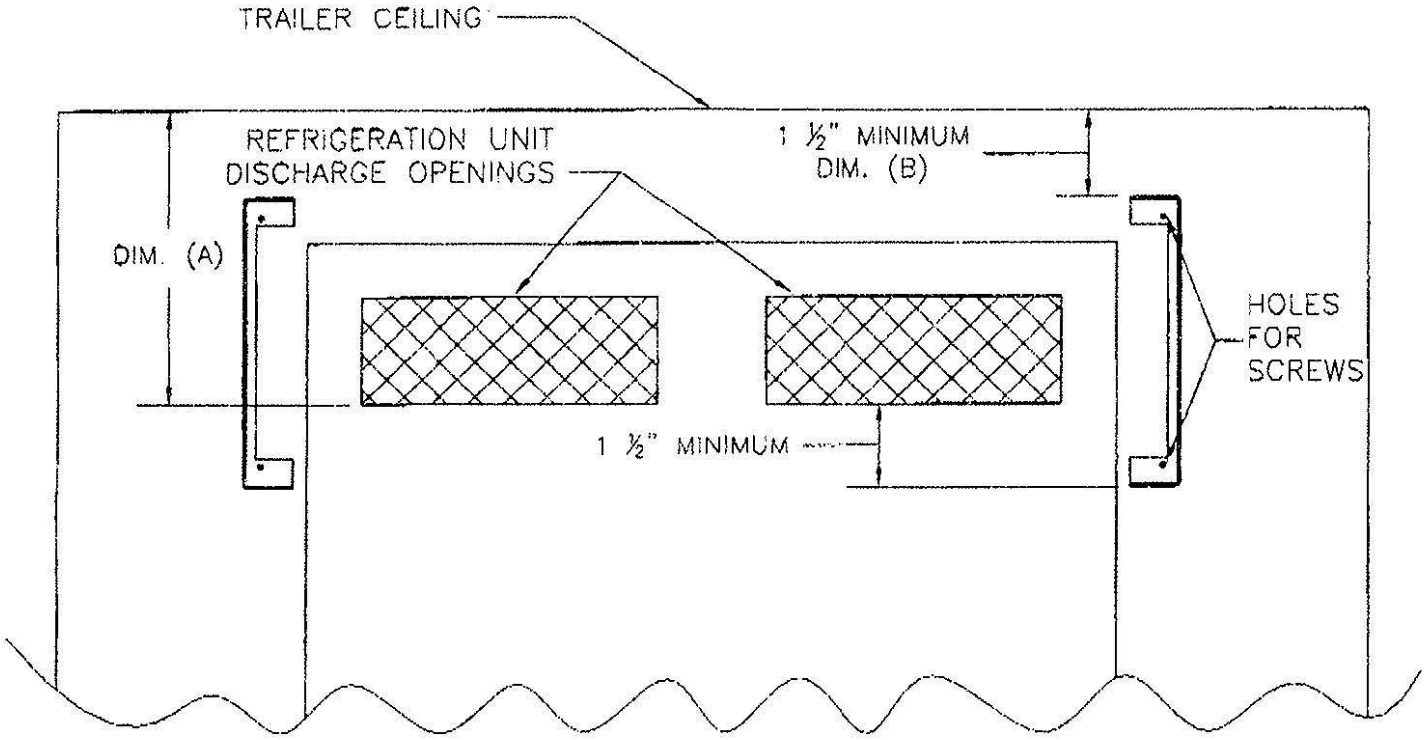

1. Check the parts list (page 1 of 3) against parts that you received.

2. Measure the distance from the ceiling of the trailer to the bottom of the refrigeration units air discharge openings (dim. A).

3. Measure and mark a line next to the refrigeration unit that is 1 ½" below the bottom of the refrigeration units air discharge openings (dim. A plus ½").

NOTE: If you do not leave at least 1 ½" from the ceiling of the trailer to the top of the mounting bracket you will not be able to install the flat washer and cotter pin required later.

4. Place the bottom of the mounting bracket on this line. Measure the distance from the ceiling of the trailer to the top of the mounting bracket (dim. B). If this dimension is less than 1 ½" then you will need to move the bracket down until this dimension is at least 1 ½".

5. Mount both brackets at this distance from the ceiling (step 4) right up against the refrigeration unit using the included self-drilling screws. Ensure that the brackets are mounted facing the correct direction as shown above.

13578
4/17/00

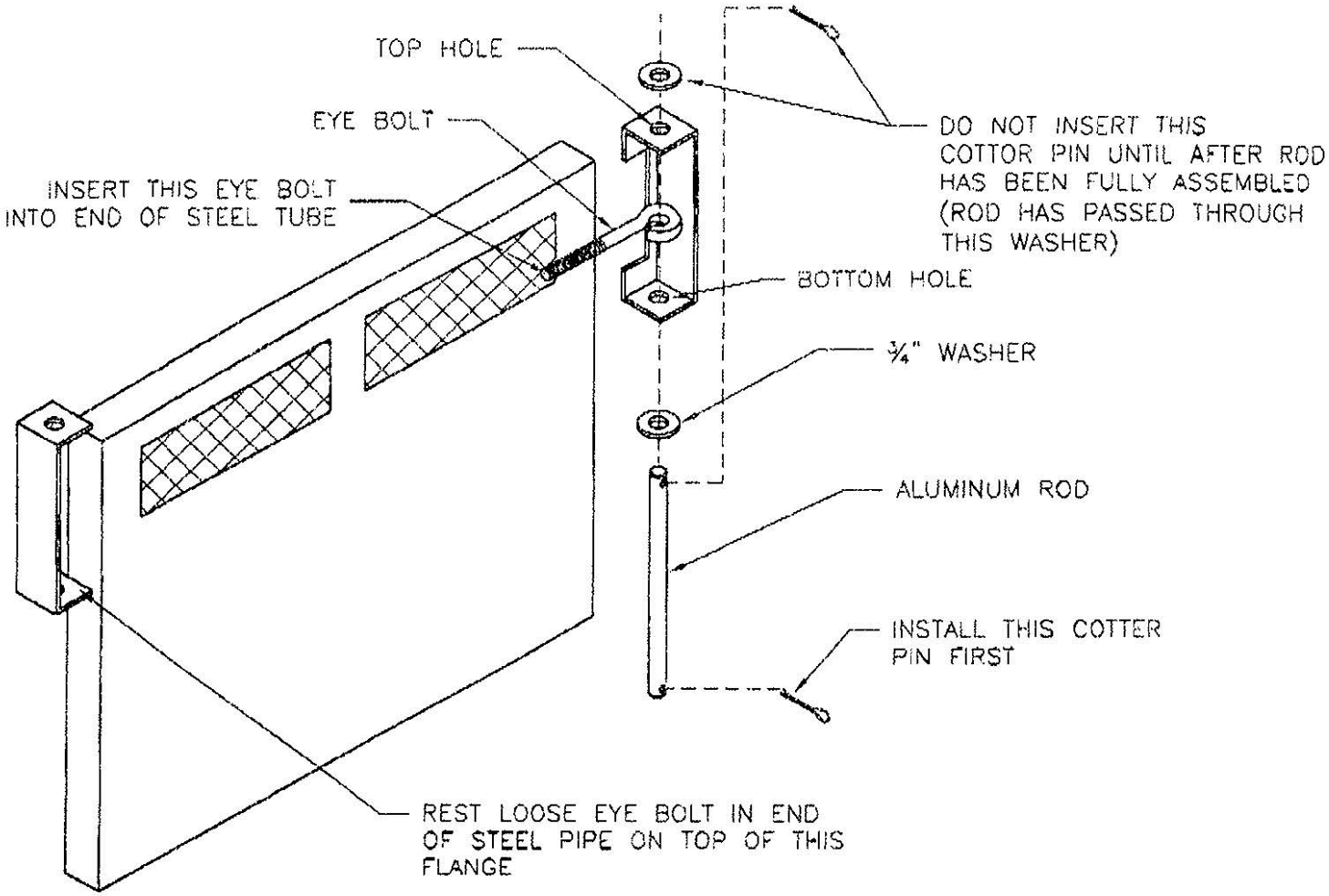

6. To fully assemble the first rod onto one of the brackets you will need to do the following (see drawing above): install a 1/8" cotter pin into one end, place a ¾" washer on the aluminum rod, insert the rod through the hole in the bottom of the bracket, place the ½" eye bolt on the rod, insert the rod through the top hole in the bracket, place another ¾" washer on the rod, and finally insert a cotter pin in the top of the rod.

7. Lay the air chute out on the trailer floor with the pocket in the chute below the refrigeration unit. Insert the galvanized steel bar into the air chute pocket.

NOTE: Make sure that the inside of the chute is towards the ceiling (seam side up)

8. Insert the eyebolt that is installed on the bracket into the end of the galvanized steel pipe. Install the other eyebolt (the one not installed yet) into the other end of the galvanized steel tube. Lift the end up with the loose eyebolt, and rest the eyebolt on top of the bottom flange of the bracket without a rod.

9. Assemble the second rod and bracket the same way you assembled the first rod and bracket (step 6).

NOTE: You must clamp down the eyebolts to the bottom of the mounting brackets prior to installing the air chute to the ceiling. This will prevent you from inadvertently pulling the adapter and air chute above the refrigerators air discharge.

10. Install the refrigeration chute in the trailer following the chute installation instructions.